XTOOL | 3D Form Module

Quick Start Guide



Statement – – – – – – – – – – – – – – – – – 01

List of items – – – – – – – – – – – – – – – – – 01

Introduction – – – – – – – – – – – – – – – – – 02

Preparations – – – – – – – – – – – – – – – – – 02

Use the Vacuum Forming Mode – – – – – – – – – 04

Use the Vacuum Sublimation Mode - – – – – – – – 11

Remove the 3D Form Module – – – – – – – – – – 20

Statement

Thank you for choosing xTool products!

If you use the product for the first time, read carefully all the accompanying materials of the product to improve your experience with it. To the extent permitted by applicable law, the Company shall not be liable for any loss or damage resulting from your failure to use the product in accordance with the instructions and requirements set forth in the Manual, or from your misuse or improper operation of the product.

The Company has collated the content of the Manual rigorously and carefully, but errors or omissions may remain.

The Company is committed to continuously improving product functions and service quality, and therefore reserves the right to change any product or software described in the Manual and the content of the Manual at any time.

The Manual is intended to help you use the product properly and does not include any description of hardware and software configuration. For product configuration, refer to the related contract (if any) and packing list, or consult your distributor. Images in the Manual are for reference only and the actual product may vary.

Protected by copyright laws and regulations, the Manual shall not be reproduced or transcribed in any way, or be transmitted on any wired or wireless network in any manner, or be translated into any language, or be modified in any way, such as content, image, or layout modification, without the prior written authorization of the Company.

The Company is committed to continuously improving the product and related materials. The product and the Manual are subject to change, and updates can be found at **xtool.com**.

List of items

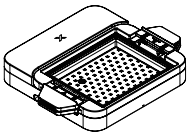

3D Form base

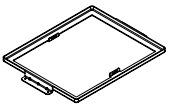

Vacuum forming pressing frame

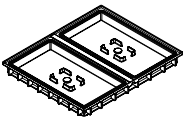

Vacuum sublimation lower frame (with pre-installed silicone plugs)

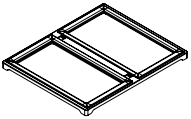

Vacuum sublimation upper frame



Heat-resistant gloves

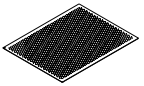

Metal mesh plate



Hex key

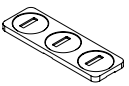

Badge jig



Quick Start Guide

Material pack

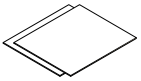

Vacuum forming film (hard, PETG)

Size: 255 × 310 mm

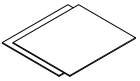

Vacuum forming film (soft, TPU)

Size: 255 × 310 mm

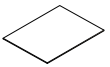

Vacuum sublimation film

Size: 148 × 254 mm



Badge



Heart-shaped mold

Introduction

This xTool 3D Form Module is designed for exclusive use with xTool WonderPress. The product integrates 3D vacuum forming and vacuum sublimation, efficiently meeting diverse demands for three-dimensional molding and surface decoration.

Preparations

■ Before use, read and follow ***Safety Instructions*** and ***Quick Start Guide*** of xTool WonderPress.

■ When using the device, ensure xTool WonderPress remains connected to the power supply.

1 Remove the Heat Press Module

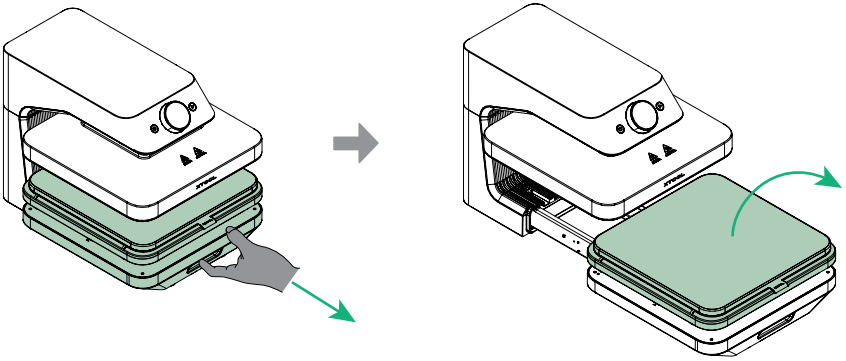

All modules of xTool WonderPress are hot-swappable. Hence, there's no need to power off the machine when replacing modules.

2 Install the 3D Form base

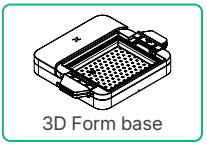

3D Form base

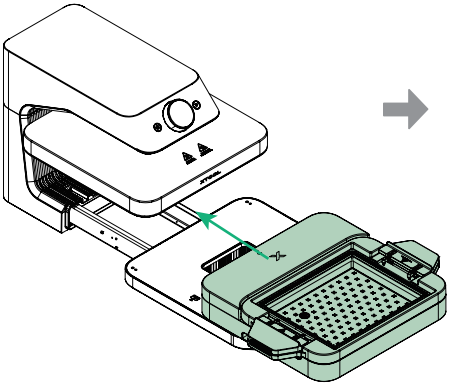

Pull the base backward

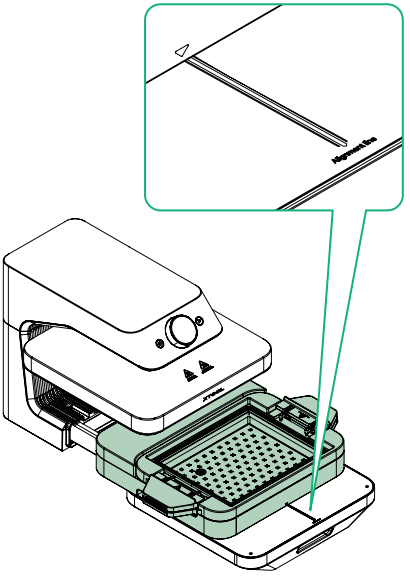

Align the alignment marks of the 3D Form base to the alignment lines on the WonderPress's base.

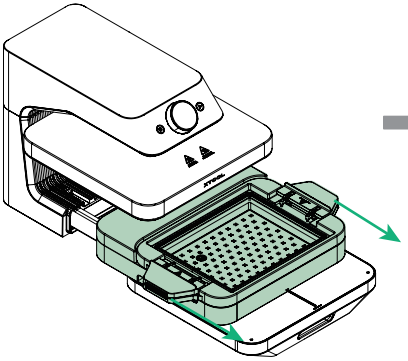

Once aligned, pull the 3D Form base forward until it is flush with the WonderPress's base.

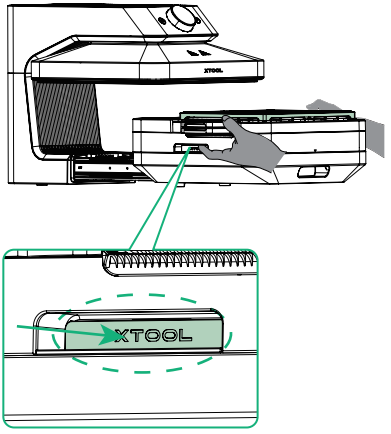

Place both hands in the positions for hands, press inward to install the module in place.

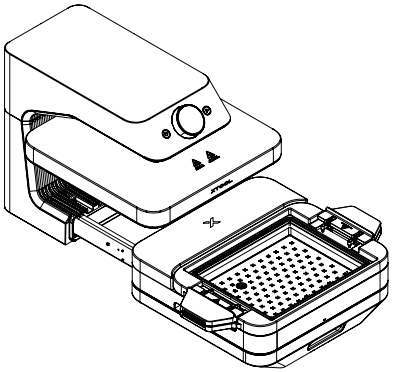

Once installation is complete, the screen displays "3D Form Module"

Use the Vacuum Forming Mode

■ This feature is suitable for processing objects with a maximum size of 258 mm in length, 203 mm in width, and 90 mm in height.

■ For optimal demolding, the object must meet two conditions: 1) Narrow at the top and wide at the bottom; 2) No concave features on the vertical surfaces.

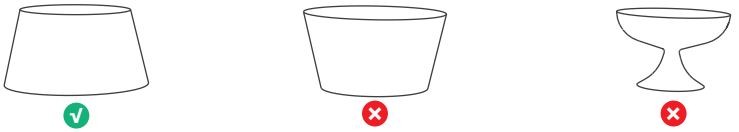

■ It is recommended to use xTool official vacuum forming film (soft, TPU). Since the film is soft and flexible, it offers a higher demolding success rate, and the two conditions above can be relaxed to some extent.

1 Select the Vacuum Forming Mode

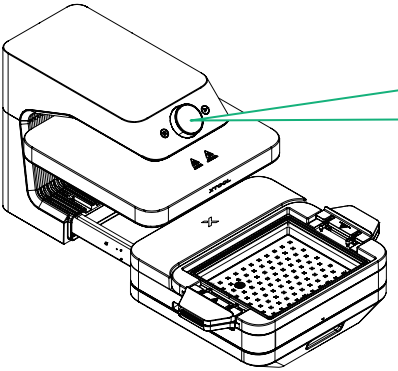

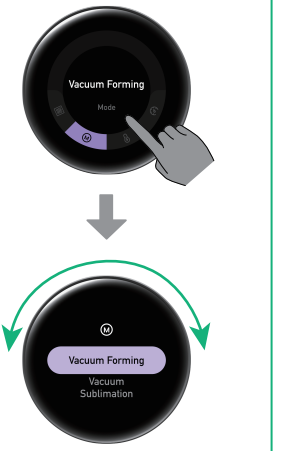

Turn the knob to select processing mode, then press the screen to confirm

2 Place the object and the vacuum forming film

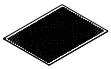

Metal mesh plate

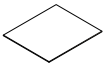

Vacuum forming film (soft)/(hard)



Heart-shaped mold

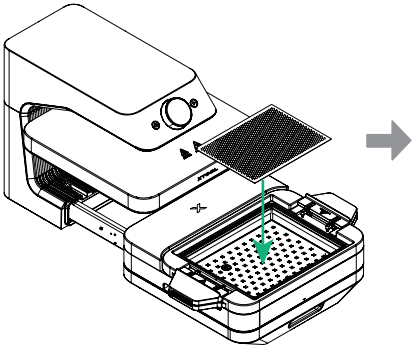

Place the metal mesh plate

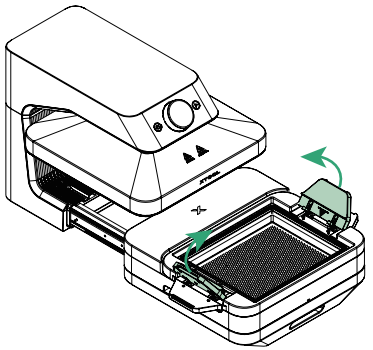

Flip up the handles on both sides

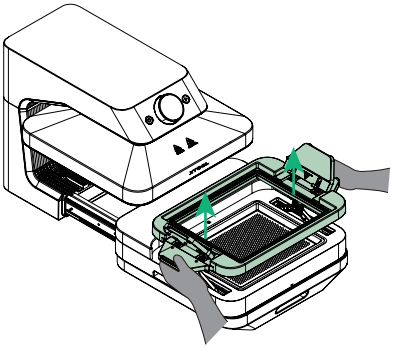

Hold the handles with both hands and pull the module frame upward until you hear a click

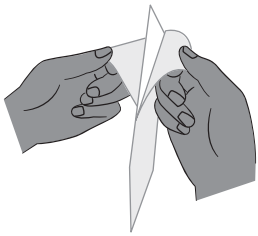

Peel off the protective film from both sides of the vacuum forming film

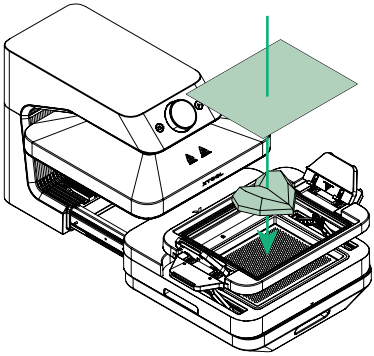

Place the heart-shaped mold and the vacuum forming film. It is recommended to place them in the center.

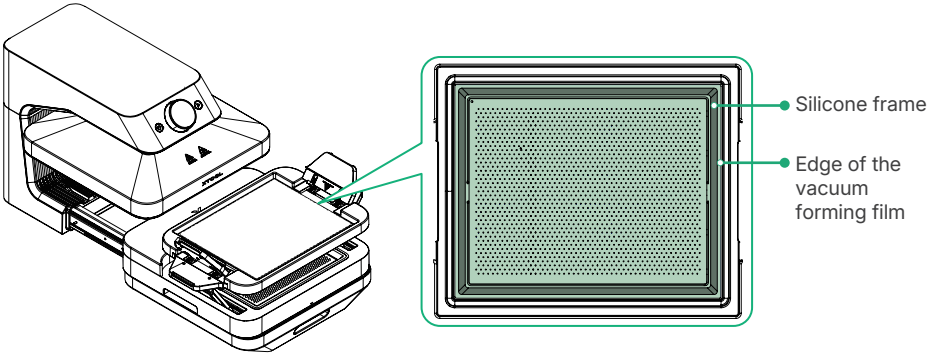

Make sure the film completely covers all four sides of the silicone frame.

3 Install the vacuum forming pressing frame

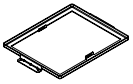

Vacuum forming pressing frame



Hex key

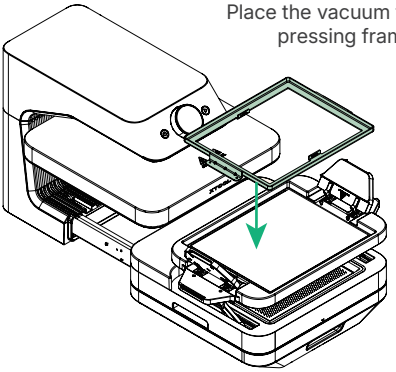

Place the vacuum forming pressing frame

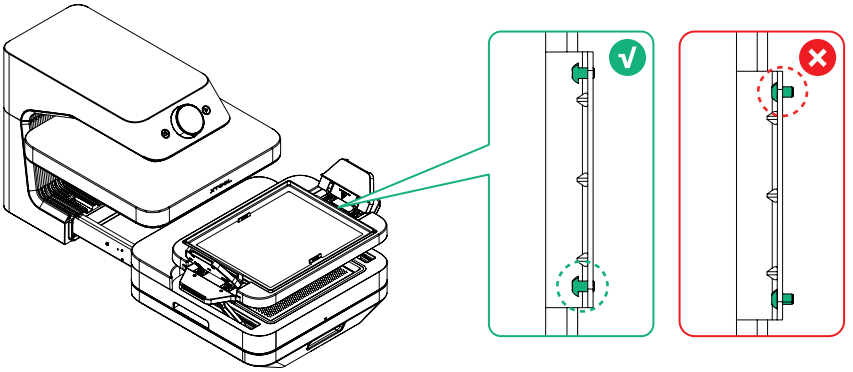

(Optional) Use a hex key to adjust the screws

The vacuum forming pressing frame is factory-calibrated for screw positions and typically requires no additional adjustment to accommodate vacuum forming films with thicknesses ranging from 0.5 mm to 1 mm. For thin films, loosen the screws slightly; for thick films, tighten the screws slightly.

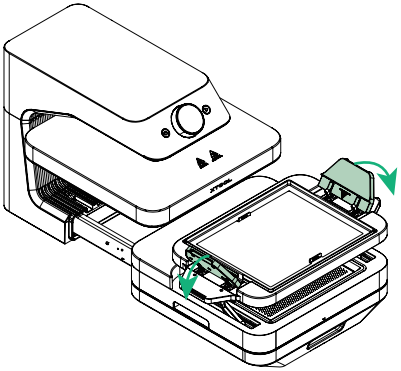

Press both handles at the same time to secure the film

4 Start processing

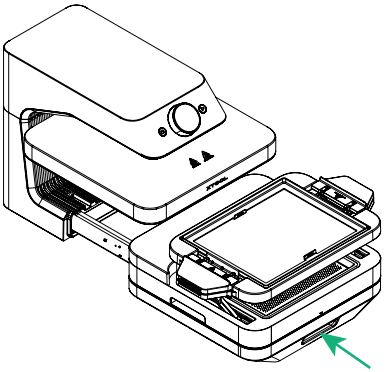

Push back into the base

Recommended settings (1mm TPU):

- Temperature: 260 °F / 127 °C
- Suction: High



Turn the knob to set the temperature and suction level, or select preset material parameters

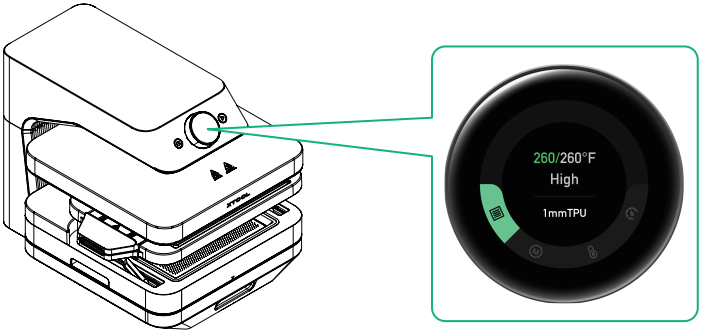

Once the set temperature is reached, the temperature indicator changes from orange to green, and the device emits a beep sound as a prompt

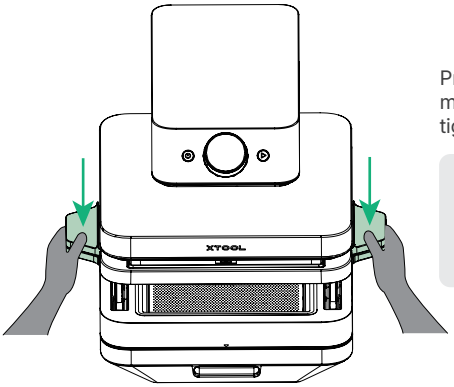

Press the handles firmly with both hands and maintain pressure for 10 seconds until the film is tightly sealed around the object

The vacuum pump will produce a noticeable sound during operation due to its powerful suction capabilities.

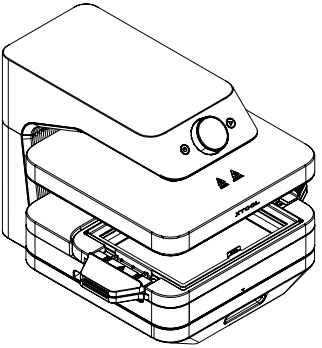

The device automatically starts processing

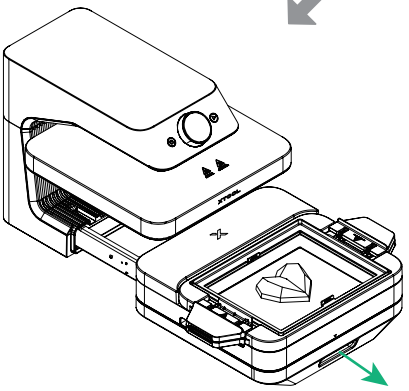

Processing complete. Pull out the base

5 Take out the object



Heat-resistant gloves

When you remove the pressing frame, wear heat-resistant gloves and avoid contact with hot surfaces.

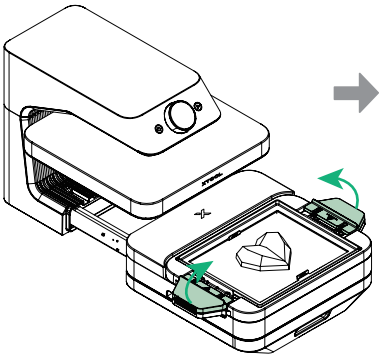

Flip up the handles on both sides

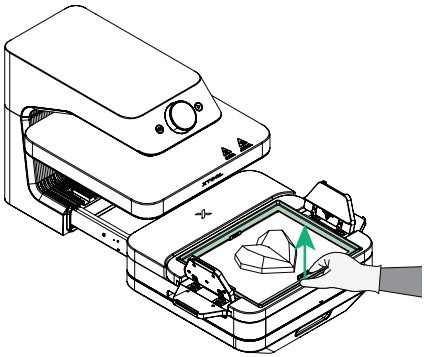

Remove the vacuum forming pressing frame

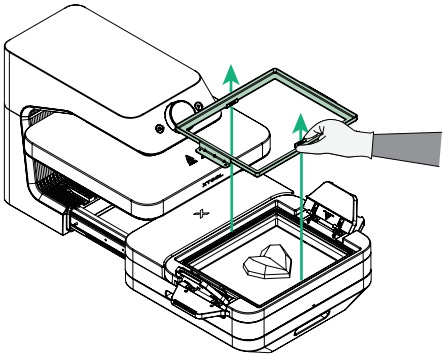

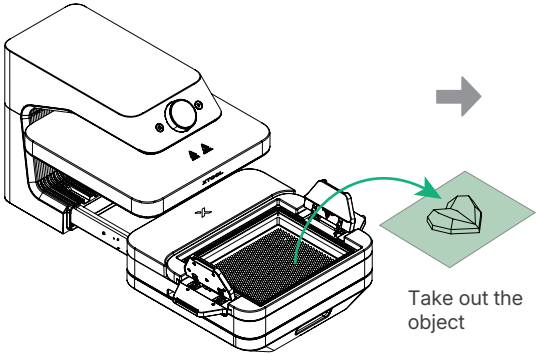

Take out the object

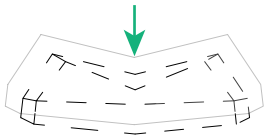

Press down on the top of the film to release the object

Use the Vacuum Sublimation Mode

This feature is suitable for processing objects with a maximum size of 230 mm in length, 124 mm in width, and 14 mm in height.

1 Dry the vacuum sublimation film

(1) Use a prepared vacuum sublimation film, or go to **s.xtool.com/doc/wp/transfer-design** to design and print your pattern (requires your own sublimation printer).

(2) Dry the vacuum sublimation film using any of the following methods, and store it in a sealed bag containing a desiccant. A damp film may affect the processing results.

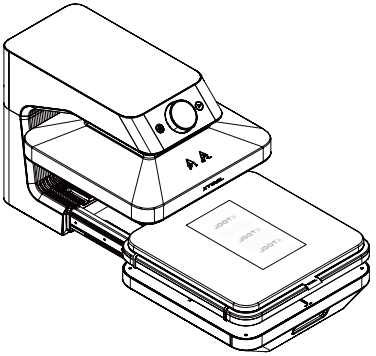

Use Heat Press Module (No need to press the Start/Stop button)

Recommended settings:

- Temperature: 212 °F / 100 °C
- Time: 300 s

Push back into the base (Adjust the temperature to 212 °F and time to 300 s)

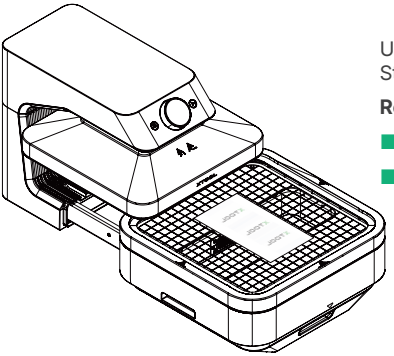

Use Craft Oven Module (Need to press the Start/Stop button)

Recommended settings:

- Temperature: 176 °F / 80 °C
- Time: 300 s

Push back into the base (Adjust the temperature to 176 °F, press the button, and set the time to 300 s)

2 Install the vacuum sublimation lower frame

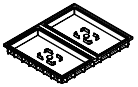

Vacuum sublimation lower frame

Make sure the metal mesh plate is removed before installing the vacuum sublimation lower frame.

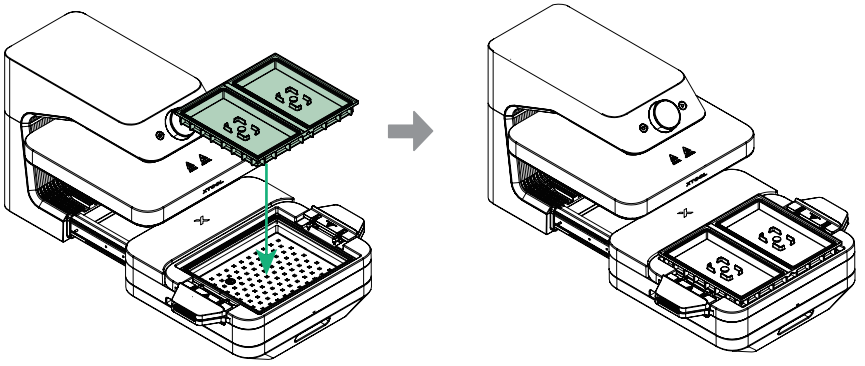

Place the vacuum sublimation lower frame

Remove the silicone plug (Processing station)

Leave the silicone plug in place (Non-processing station)

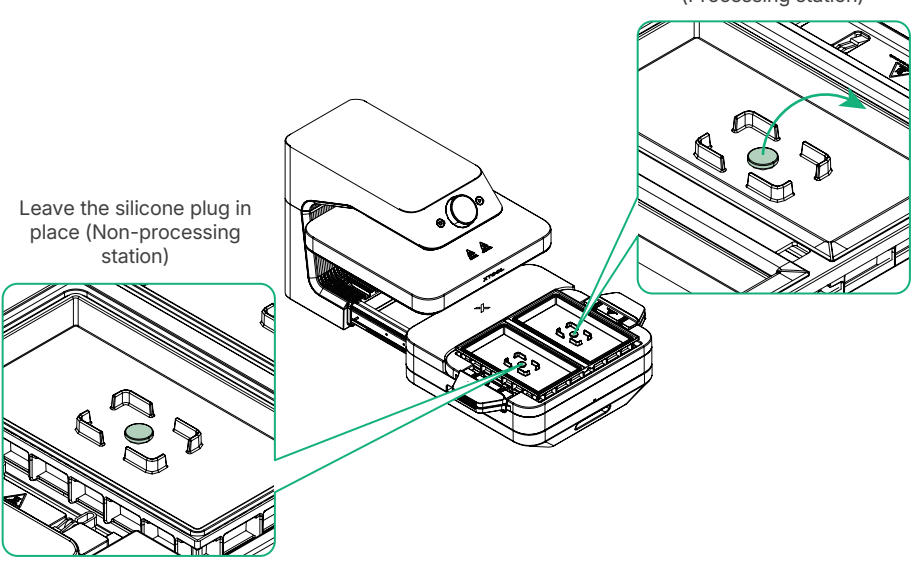

The vacuum sublimation mode features dual processing stations (left and right). Ensure the silicone plugs are removed before processing. The silicone plugs must remain in place on the station that is not being processed.

3 Place the badge jig

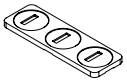

Badge jig

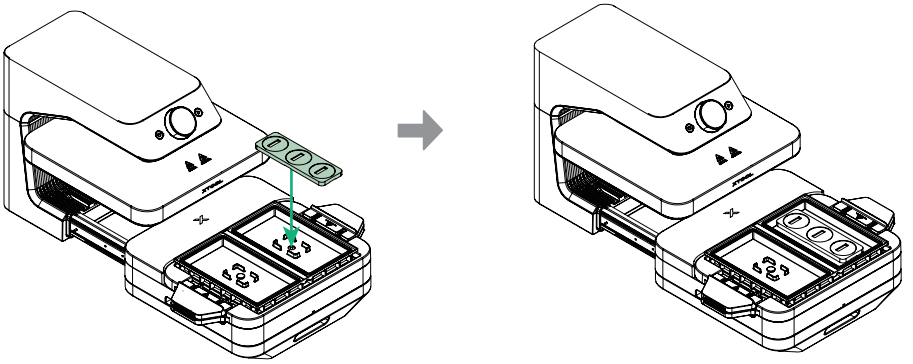

Make sure the slot on the back of the jig aligns with the positioning tabs underneath

4 Install the vacuum sublimation upper frame

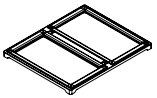

Vacuum sublimation upper frame

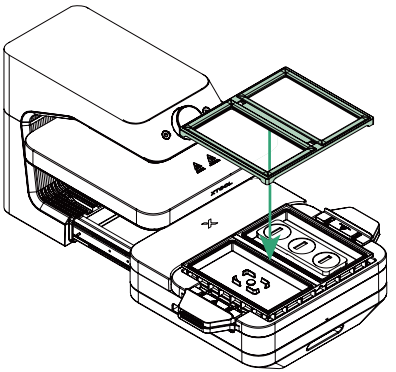

The vacuum sublimation upper frame must completely cover the lower frame

5 Set parameters and start preheating

Select the **Vacuum Sublimation Mode**, set the parameters (you can use the preset or self-defined parameter), and start preheating.

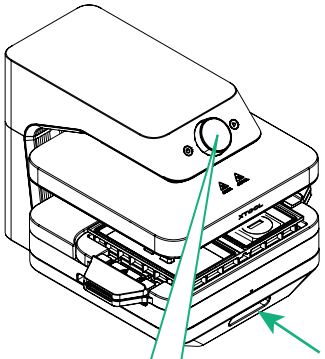

Recommended settings:

- Temperature: 374 °F / 190 °C
- Time: 460 s

Push back into the base



Press

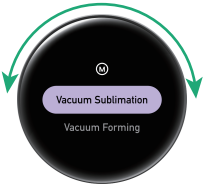

Rotate to select mode, press to confirm



Press

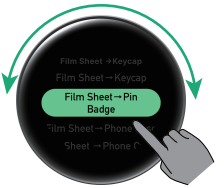

Rotate to select material, press to confirm





Wait until the temperature reaches the set temperature



Rotate to select preheating, press to confirm

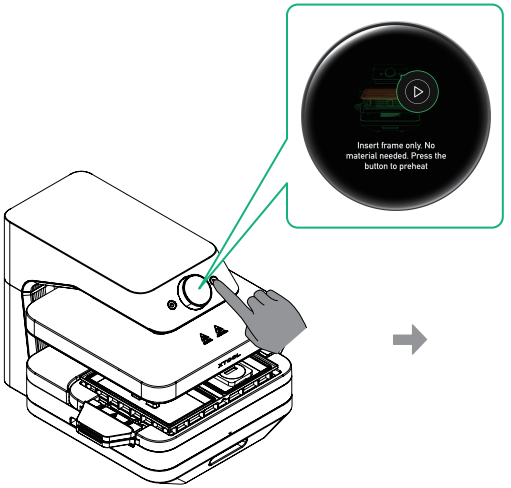

Follow the on-screen prompts and press the **Start/Stop button** to start preheating.

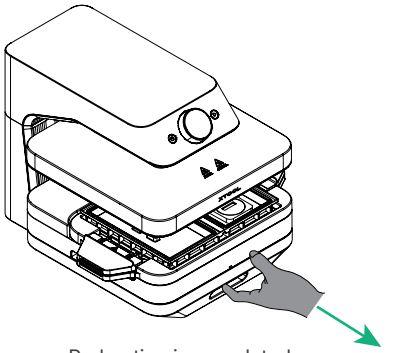

Preheating is completed. Pull out the base

6 Remove the vacuum sublimation upper frame

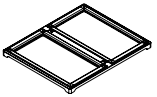

Vacuum sublimation upper frame



Heat-resistant gloves

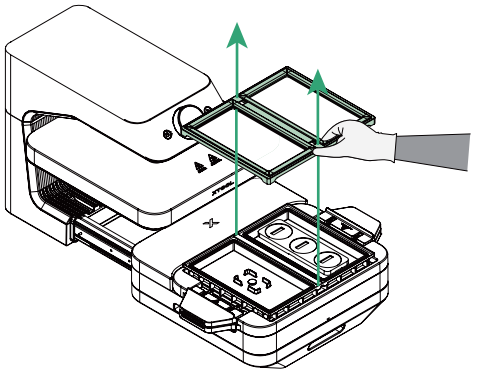

7 Place the badge and vacuum sublimation film



Badge

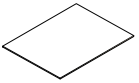

Vacuum sublimation film



Heat-resistant gloves

- Please wear the gloves and be careful not to get burned by the high temperature.
- Use a sublimation printer to print the design onto the matte side of the vacuum sublimation film.
- To ensure optimal sublimation results, allow the vacuum sublimation film to air dry completely after printing. Otherwise, residual moisture may affect the result.

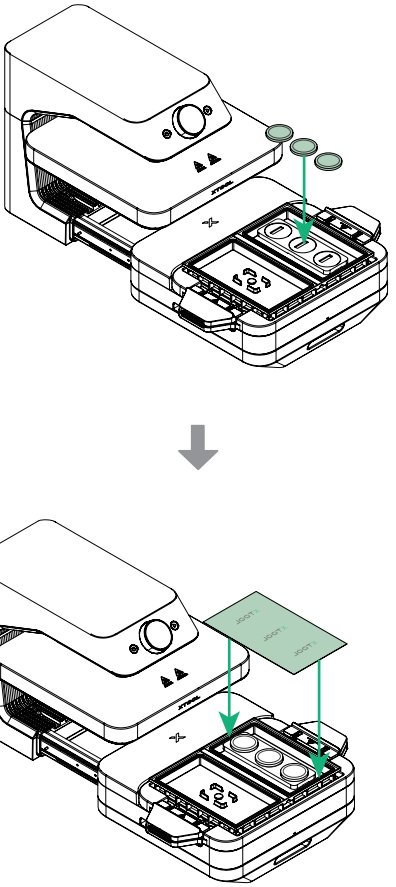

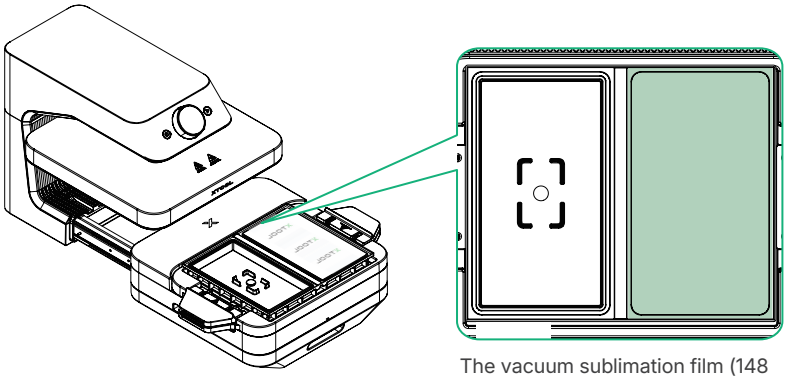

The vacuum sublimation film (148 × 254 mm) needs to fit perfectly with the frame

■ When placing the vacuum sublimation film, make sure the side with the design is facing down.

■ Once the vacuum sublimation film is in place, it will curl due to heat. Please immediately install the vacuum sublimation upper frame and start processing. Otherwise, the curling of the film may cause air leaks, leading to processing failure.

8 Install the vacuum sublimation upper frame

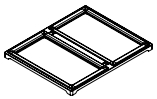

Vacuum sublimation upper frame



Heat-resistant gloves

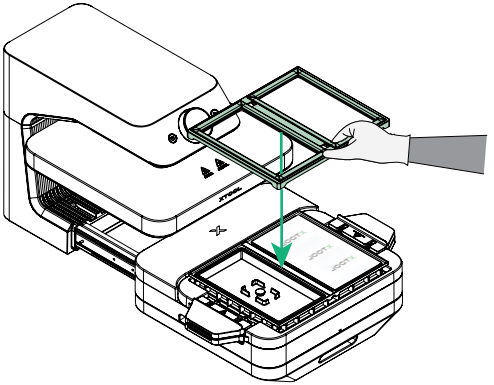

The vacuum sublimation upper frame must completely cover the lower frame

9 Start processing

Once the set temperature is reached, start processing according to the manual/automatic mode selected during parameter setup.

Manual mode

Push in the base, then press the Start/Stop button to begin processing.

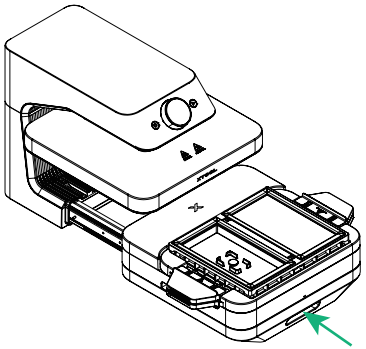

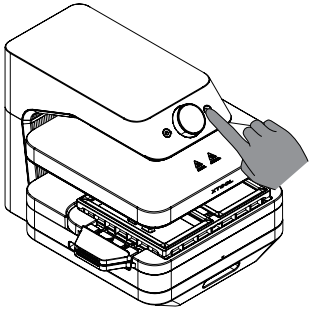

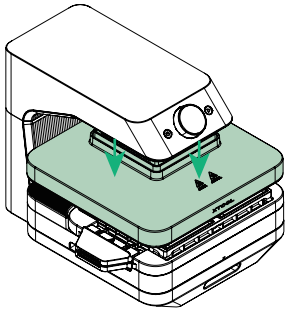

Start processing: the heating plate automatically presses down, heating the vacuum sublimation film for 20 seconds. After that, the vacuum pump starts, and you will hear the sound of the vacuum process

Or

Auto mode

Push in the base, and the device will start processing automatically.

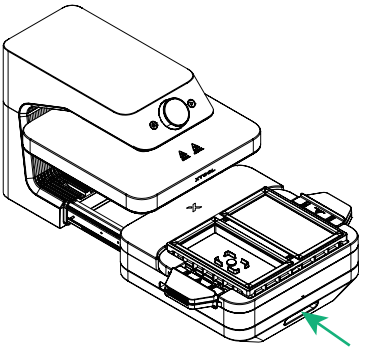

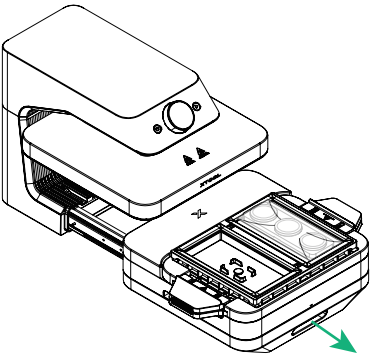

Processing complete. Pull out the base

10 Take out the object



Heat-resistant gloves

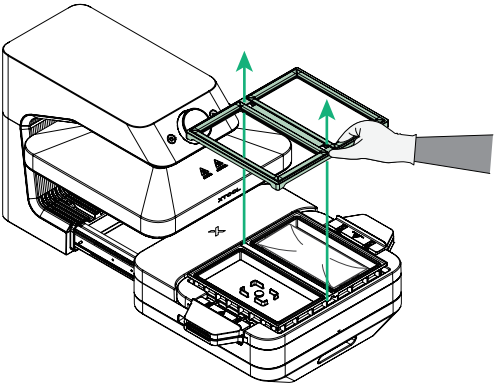

Remove the vacuum sublimation upper frame with heat-resistant gloves

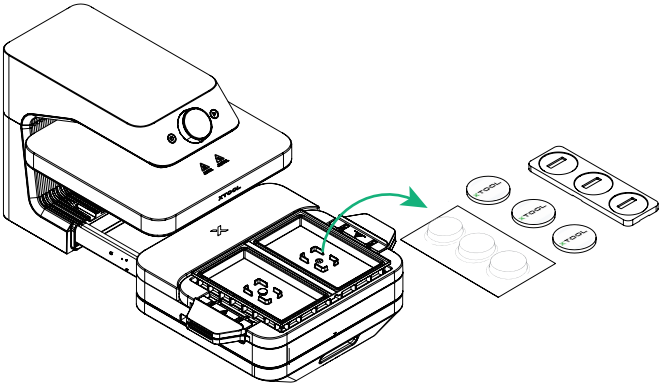

Remove the vacuum sublimation film, badge, and badge jig

Remove the 3D Form Module

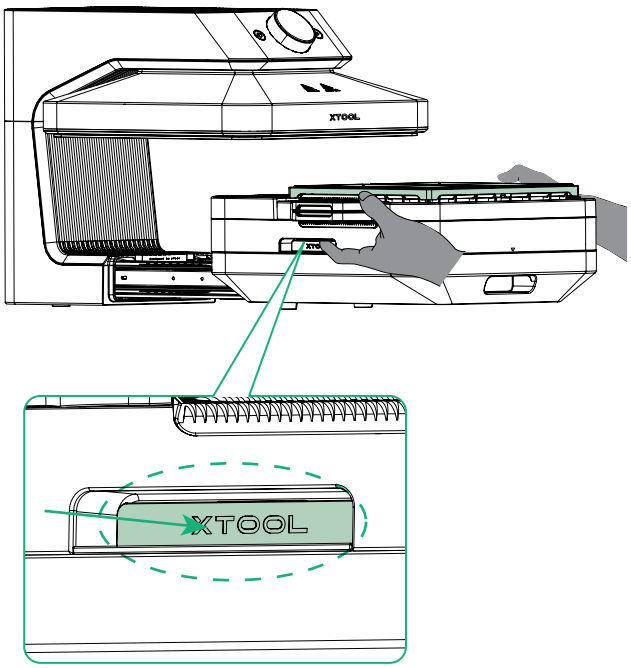

Place both hands in the positions for hands, press inward, and lift the module

XTOOL